GE APPLIANCES

OPAL ICE MAKER

SAFETY INFORMATION 3

PARTS INCLUDED 5

GETTING STARTED 6

CARE AND CLEANING 7

DISPLAY SETTINGS 10

MAKING ICE 10

DRAINING 10

WATER FILTER 10

SIDE TANK ACCESSORY 11

TROUBLESHOOTING 14

ICE MAKER PRODUCT SPECIFICATIONS 15

LIMITED WARRANTY 16

CONSUMER SUPPORT 17

OWNER'S MANUAL

OPAL01GEPKT

ENGLISH/FRANÇAIS

Write the model and serial numbers here:

Model #_____

Serial # _____

Find these numbers on a label
on the back of the unit.

GE is a trademark of the General Electric Company. Manufactured under trademark license.

49-1000418 Rev. 0 08-19 GEA

THANK YOU FOR MAKING GE APPLIANCES A PART OF YOUR HOME.

Whether you grew up with GE Appliances, or this is your first, we’re happy to have you in the family.

We take pride in the craftsmanship, innovation and design that goes into every GE Appliances product, and we think you will too. Among other things, registration of your appliance ensures that we can deliver important product information and warranty details when you need them.

GE APPLIANCES

49-1000418 Rev. 0

IMPORTANT SAFETY INFORMATION
READ ALL INSTRUCTIONS BEFORE USING THE APPLIANCE

⚠WARNING To reduce the risk of fire, explosion, electric shock, exposure to UV radiation, or injury when using your Opal, follow these basic safety precautions.

- Do not, under any circumstances, alter or remove the third (ground) prong from the power cord. For personal safety, this product must be properly grounded.
- Do not exceed power outlet ratings. It is recommended that the ice maker is connected to its own circuit. Use only a 115 V, 60 Hz standard electrical supply that is properly grounded in accordance with the National Electric Code and local codes and ordinances.
- Due to potential safety hazards under certain conditions, we strongly advise against the use of an extension cord. However, if you must use an extension cord, it is absolutely necessary that it is a UL-listed, 3-wire ground type appliance extension cord having a grounding type plug and that the electrical rating of the cord be 15 Amperes (minimum) and 120 Volts.
- This product must be properly installed and located in accordance with the installation instructions before it is used. Product is for indoor household use only. Do not use outdoors.
- Do not store or use flammable vapors or liquids near this product.
- Do not allow children to climb, stand, or hang on the ice maker. They could seriously injure themselves.
- Do not look directly at UV lamp when it is operating. The light emitted by the lamp will cause serious eye damage and burn unprotected skin.
- In order to avoid exposure to UV radiation, disconnect power to the ice maker before removing the external covers.
- Do not use with water that is micro-biologically unsafe or of unknown quality.
- Place power cord in such a way it cannot be pulled on by children or cause a tripping hazard.
- Place power cord in such a way that it is not in contact with hot surfaces.
- Do not operate if any component, including the cord or plug, is damaged.
- Unplug the product before cleaning by hand and when not in use.
- Do not immerse any part of the product in water.
- Do not plug or unplug product with wet hands.
- Do not attempt to disassemble, repair, modify, or replace any part of your product.
- Use this product only for its intended purpose as described in this user manual.
- Do not use any accessories not recommended by the manufacturer.
- When handling, installing, and operating the appliance, care should be taken to avoid damage to the refrigerant tubing.
- Servicing shall be performed by factory authorized service personnel and component parts shall be replaced with manufacturer authorized replacement components.

⚠CAUTION To reduce the risk of injury when using your Opal, follow these basic safety precautions.

- Do not remove any safety, warning, or product information labels from your ice maker.
- Lifting Hazard: It is recommended to have two people move and install the ice maker in order to prevent injury.

⚠WARNING **FIRE OR EXPLOSION HAZARD Flammable Refrigerant**

This appliance contains isobutane refrigerant, also known as R600a, a natural gas with high environmental compatibility. Howber, it is also combustible. Adhere to the warnings below to reduce the risk of injury or property damage.

1. When handling, installing, and operating the appliance, care should be taken to avoid damage to the refrigerant tubing.
2. Service shall only be performed by authorized service personnel. Use only manufacturer-authorized service parts.
3. Dispose of refrigerator in accordance with Federal and Local Regulations. The flammable refrigerant and insulation material used in this product require special disposal procedures. Contact your local authorities for the environmentally safe disposal of your refrigerator.
4. Keep ventilation openings in the appliance enclosures or in the built-in structure clear of obstruction.
5. To remove frost, scrape with a plastic or wood spatula or scraper. Do not use an ice pick or a metal or sharp-edged instrument as it may punture the freezer liner and then the flammable refrigerant tubing behind it.
6. Do not use electrical appliances inside the food storage compartment of the appliance.
7. Do not use any electrical device to defrost your appliance

READ AND SAVE THESE INSTRUCTIONS

CONSIGNES DE SÉCURITÉ IMPORTANTES
LISEZ, SUIVRE, ET CONSERVER CES INSTRUCTIONS

⚠ AVERTISSEMENT **Pour réduire le risque d'incendie, d'explosion, de choc électrique, d'exposition aux rayons UV ou de blessure lors de l'utilisation de votre Opal, observez les consignes de sécurité élémentaires suivantes.**

- En cas, vous ne devez modifier ni retirer la troisième broche (terre) du cordon électrique. Pour votre sécurité, ce produit doit être correctement mis à la terre.
- N'excédez pas les valeurs nominales de la prise électrique. Nous recommandons que la machine à glaçons soit branchée à son propre circuit. Utilisez uniquement une alimentation électrique standard de 115 V, 60 Hz, correctement mise à la terre conformément au code national de l'électricité et aux codes et règlements locaux en vigueur.
- En raison de risques potentiels pour la sécurité dans certaines conditions, nous vous mettons fortement en garde contre l'utilisation d'un cordon prolongateur. Si toutefois vous devez utilizer un cordon prolongateur, celui-ci doit présenter les caractéristiques suivantes : type pour électroménagers à trois broches avec mise à la terre, fiche avec mise à la terre, homologation UL, valeurs nominales de 15 ampères (minimum) et 120 volts.
- Ce produit doit être installé correctement et placé conformément aux instructions d'installation avant son utilisation. Ce produit est destiné à un usage domestique à l'intérieur seulement. Ne l'utilisez pas à l'extérieur.
- Ne rangez ni n'utilisez des vapeurs ou des liquides inflammables à proximité de ce produit.
- Ne permettez pas aux enfants de grimper sur la machine à glaçons, ni de s'y tenir ou s'y agripper. Ils pourraient se blesser gravement.
- Ne regardez pas la lampe UV directement lorsqu'elle est allumée. La lumière émise par la lampe peut causer des lésions sévères aux yeux ou brûler la peau non protégée.
- Afin de prévenir l'exposition aux radiations UV, débranchez l'alimentation électrique à la machine à glaçons avant de retirer les couvercles extérieurs.
- N'utilisez pas d'eau impropre à la consommation ou de qualité douteuse sur le plan microbiologique.
- Placez le cordon électrique de façon qu'il ne soit pas tiré par les enfants et qu'il ne pose pas un risque de trébuchement.
- Placez le cordon électrique de façon qu'il ne touche pas aux surfaces chaudes.
- Ne faites pas fonctionner l'appareil si un de ses composants, cordon et fiche inclus, est endommagé.
- Débranchez le produit avant de le nettoyer à la main ou lorsqu'il n'est pas utilisé.
- N'immergez aucune pièce de ce produit dans l'eau.
- Ne branchez ni ne débranchez le produit avec les mains mouillées.
- Ne tentez pas de démonter, réparer, modifier ou remplacer une pièce quelconque de ce produit.
- Utilisez ce produit uniquement aux fins auxquelles il est destiné qui sont décrites dans ce manuel d'utilisation.
- N'utilisez aucun accessoire qui n'est pas recommandé par le fabricant.
- Lors de la manipulation, de l'installation et de l'utilisation de l'appareil, veillez à ne pas endommager le tube de réfrigérant.
- L'entretien doit être effectué par du personnel de service autorisé par l'usine et les composants doivent être remplacés par des pièces de rechange autorisées par le fabricant.l.

⚠ ATTENTION **Pour réduire le risque de blessure lors de l'utilisation de votre Opal, observez les consignes de sécurité élémentaires suivantes**

- Ne retirez aucune étiquette apposée sur la machine à glaçons qui présente des renseignements sur la sécurité, les avertissements ou le produit.
- Risque associé à une charge lourde : Nous recommandons que deux personnes déplacent et installent la machine à glaçons afin de prévenir les blessures.

⚠ AVERTISSEMENT **RISQUE D'INCENDIE OU D'EXPLOSION Fluide frigorigène inflammable**

Cet électroménager contient le réfrigérant isobutane, aussi connu comme R600a, un gaz naturel à compatibilité élevée avec l'environnement. Il s'agit cependant d'un combustible. Observez les consignes de sécurité ci-dessous afin de réduire le risque de blessure ou de dommage à la propriété.

1. Lors de la manipulation, de l'installation et de l'utilisation de cet appareil, prenez soin de ne pas endommager les tubes de circulation du fluide frigorigène.
2. L'entretien ou la réparation doivent être effectués par un personnel de service autorisé. Utilisez seulement des pièces de rechange autorisées par le fabricant.
3. Mettez le réfrigérateur au rebut conformément aux réglementations fédérales et locales. Le fluide frigorigène inflammable et le matériel isolant utilisés nécessitent des procédures de mise au rebut spéciales. Communiquez avec les autorités locales compétentes pour la mise au rebut de votre réfrigérateur sans danger pour l'environnement.
4. N'obstruez pas les évents dans l'enceinte prévue pour l'appareil.
5. Pour retirer le givre, grattez à l'aide d'un grattoir ou d'une spatule en plastique ou en bois. N'utilisez pas un pic à glace ni un instrument métallique ou aux arêtes coupantes car il y a risque de percer la doublure du congélateur et la tubulure du réfrigérant inflammable derrière elle.
6. N'utilisez pas d'appareils électriques dans le compartiment réfrigérateur de cet appareil.
7. N'utilisez aucun appareil électrique pour dégivrer votre congélateur.

LISEZ, SUIVRE, ET CONSERVER CES INSTRUCTIONS

Parts Included

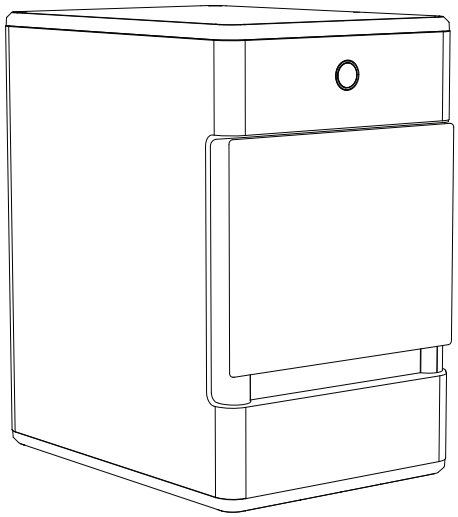

Opal Ice Maker

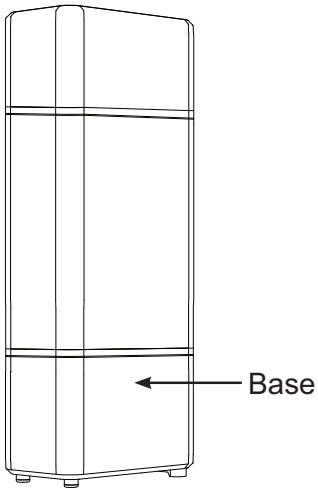

Side Tank Accessory

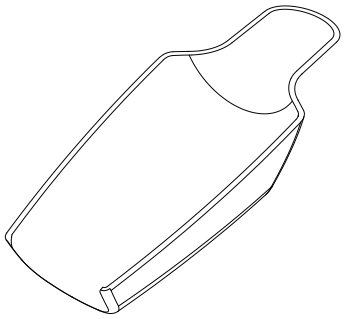

Ice Scoop

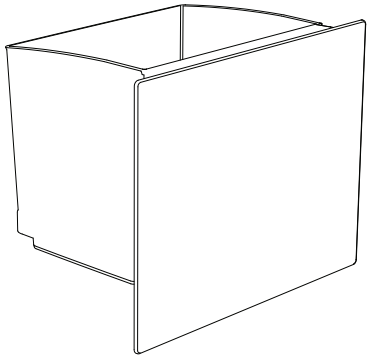

Ice Bin

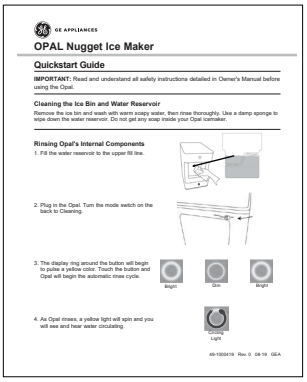

GE APPLIANCES

OPAL Nugget Ice Maker

Quickstart Guide

IMPORTANT: Read and understand all safety instructions detailed in Owner's Manual before using the Opal.

Cleaning the Ice Bin and Water Reservoir

Remove the ice bin and wash with warm soapy water, then rinse thoroughly. Use a damp sponge to wipe down the water reservoir. Do not get any soap inside your Opal icemaker.

Rinsing Opal's Internal Components

1. Fill the water reservoir to the upper fill line.
2. Plug in the Opal. Turn the mode switch on the back to Cleaning.
3. The display ring around the button will begin to pulse a yellow color. Touch the button and Opal will begin the automatic rinse cycle.

Bright Dim Bright

4. As Opal rinses, a yellow light will spin and you will see and hear water circulating.

Cleaning Light

49-1000419 Rev. 0 08-19 GEA

Quick Start Guide

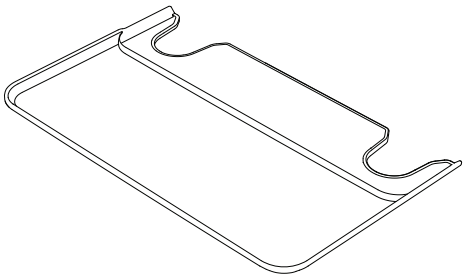

Drip Tray

Getting Started

Installation Requirements

⚠CAUTION **Lifting Hazard: It is recommended to have two people move and install the ice maker in order to prevent injury.**

- Product is designed to be installed indoors. Do not use your ice maker outdoors.
- Product must be installed upright on a flat, level surface that is able to support the total weight when full of water.
- Ensure a minimum of three inches (3") clearance around the side and back walls of the ice maker for proper air circulation.
- Install the product in a well-ventilated area with an ambient temperature between 55°F and 90°F.
- Do not place the product near heat sources such as ovens or cooktops.
- Do not place the product in direct sunlight.

Prepare Opal For Use

1. Carefully remove packing material. Do not use sharp tools that can damage the box contents.
2. Ensure all components are present. If any item is missing, please contact 1.866.907.6718.
3. Place the ice maker upright on a flat, level surface and plug it in.
4. Install drip tray by sliding it under the front edge of Opal. The tray slots should align with the front feet of Opal.
5. Rinse the ice maker with clean water for five minutes before first use. Start with step 4 of cleaning instructions on page 6. It is not necessary to use bleach for the first rinse.

⚠NOTICE Some types of under-cabinet lamps can be hot enough to cause damage to your Opal top's appearance.

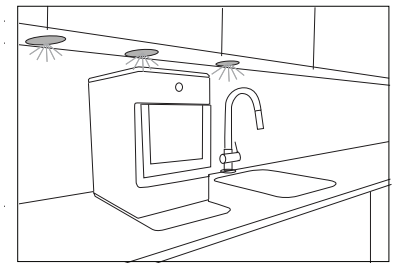

Care and Cleaning

To keep your nuggest ice tasting fresh and your Opal looking great, we recommend cleaning/sanitizing your Opal at least once per week.

To clean the exterior of the ice maker, unplug the product, then use a soft cloth dampened with soapy water to gently clean the exterior surfaces. Dry with a soft cloth.

The exterior stainless steel surfaces can be cleaned with commercially available stainless steel cleaner. Use only a liquid cleaner free of grit and rub in the direction of the brush lines with a damp, soft sponge. Do not use appliance wax, polish, solvents, or chemicals on the stainless steel. Do not use soap to clean the reservoir. Use a soft cloth moistened with water.

⚠WARNING Chemical Exposure Hazard, when cleaning with bleach, use bleach in a well ventilated area and avoid mixing bleach with other household cleaners.

⚠WARNING Unplug the product before cleaning by hand, and when not in use.

System Cleaning / Sanitizing Procedure

To clean Opal's internal components, complete the following steps:

1. Unplug Opal.

2. Remove water filter (if present), and replace with the reservoir's screened intake cap.
   See Figure 1.

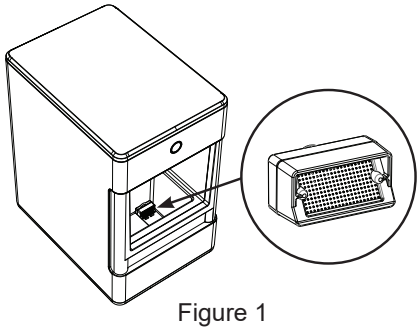

Figure 1

3. Drain Opal (see page 8 for detailed instructions).

4. Plug in Opal and slide the rear switch to the "clean" position.
   See figure 2.

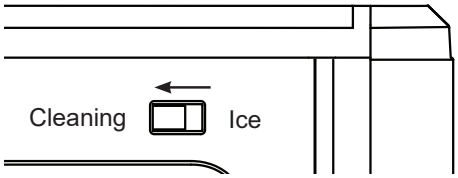

Figure 2

5. The display ring will light up yellow and pulse.
   See figure 3.

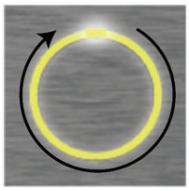

Figure 3

NOTE: Do not use soap to clean the water reservoir.

6. Create a solution of five cups of water and one tsp household bleach. Skip to page 8 for further instructions on how to remove hard mineral deposits.

7. Pour solution into water reservoir.
   See figure 4.

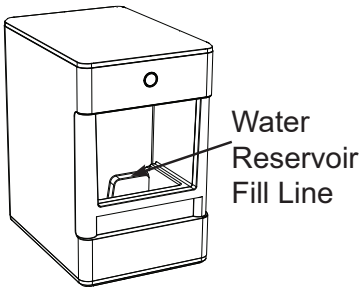

Figure 4

Care and Cleaning

System Cleaning / Sanitizing Procedure (continued)

8. Touch the display button to start the cleaning process, the light will start to spin and you will hear water circulating. After three minutes the water will stop and the light will begin to pulse again.

Display

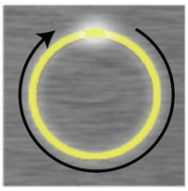

9. When the light pulses, drain Opal.

10. Unhook the top of the drain hoses at the back of the unit. See figure 5.

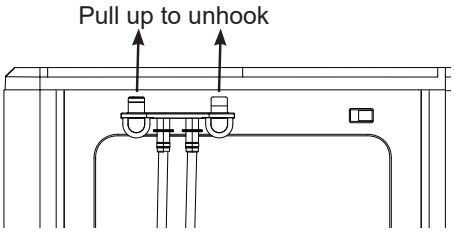

Figure 5

11. Then lay them down to drain into a sink or bucket that is below the level of the ice maker. See figure 6 and 7.

12. Remove the plugs and allow the water to completely drain. See figure 7.

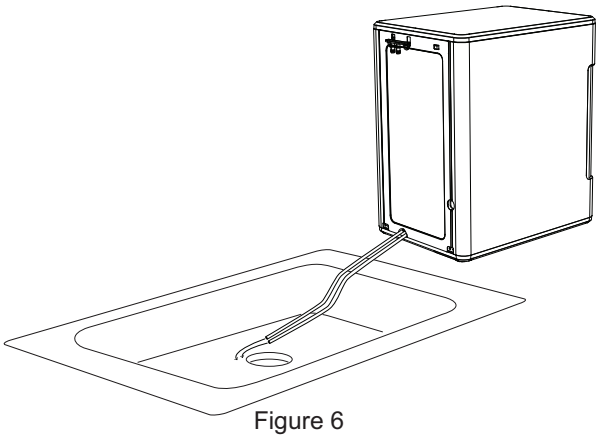

Figure 6

13. Once water stops flowing, re-insert the drain plugs.

14. Add five cups of fresh water to the water reservoir, and touch the button. The light ring is divided into four sections to indicated each stage. Successive quarters of the ring will become brighter with each rinse cycle.

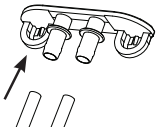

Figure 7

15. Rinse three times with fresh water. Repeat steps 8 through 14 two more times, adding fresh water to the reservoir each time. (You may continue to repeat the rinse cycle, for as many times as you like.

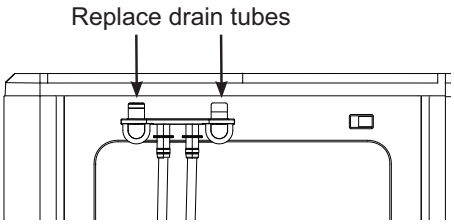

Figure 8

16 Replace drain tubes on back. See figure 8.

17. When complete, slide the rear switch back to "Ice" mode. See figure 9.

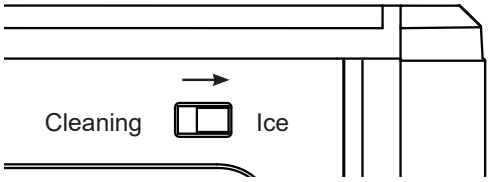

Figure 9

Care and Cleaning

Removal of Mineral Deposits

1. Fill the reservoir with vinegar to the max fill line and run up to three cleaning cycles. Or purchase an Opal Cleaning Kit and follow instructions inside.
2. If using vinegar, leave the vinegar in the unit for 18 hours and set a vinegar-soaked towel on the ice chute overnight to further dissolve any mineral buildup.
3. Clean the sensors with vinegar and wipe clean with water. After draining the vinegar, run three rinse cycles, using fresh water for each rinse.

Cleaning the Bin and Tray

To clean the ice bin, remove the ice bin from the ice maker and clean with a soft cloth dampened with soapy water. Rinse thoroughly. Dry with a soft cloth. **Do not use solvents or chemicals.**

The drip tray should be wiped dry. Water left in this area may leave deposits. To clean the drip tray, remove the tray from Opal and use a soft cloth dampened with mild soapy water to gently clean the surface. Dry with a soft cloth. **Do not use solvents or chemicals.**

Understanding the display

Opal uses an innovative light ring to let you know what it is doing.

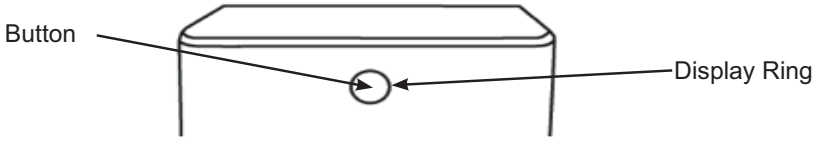

Button
Touch once to turn Opal ON or OFF
Touch and hold for 3 seconds to dim the interior lighting if desired.

Display Ring
Displays status of the Opal ice maker. See below for details.

Mode switch (located on back)
Switch in "Ice" position places Opal in ice making mode.
Switch in "Cleaning" position places Opal in cleaning mode.

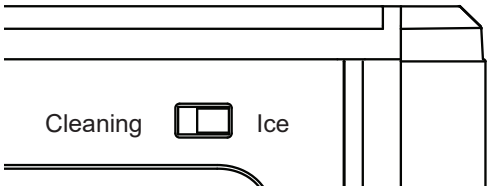

Falling White: Opal is currently making ice.

White

Solid white: Ice bin is full. Opal is no longer continuing to make ice.

White

Switching blue: Opal needs more water

White and blue

Pulsing yellow: Opal is in cleaning mode, awaiting drain and refill confirmation

Yellow

Rotating yellow: Opal is rinsing (cleaning mode)

Yellow

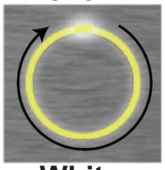

Slowly falling white: Opal is defrosting. Please do not unplug or turn off, this takes 30 minutes.

White

Making Ice with Opal

Once Opal has been cleaned/sanitised, move the ice maker to its desired location and complete the following steps.

1. Remove ice bin.
2. Fill reservoir with potable (safe to drink) water up to the "Max Fill" line. Water hardness must be less than 12 grains per gallon. Do not fill reservoir with any liquid except water. Using any liquid except potable water is misuse and will void your warranty.
3. Plug the ice maker into a grounded outlet.
4. Touch the display button to start the ice maker. The display will flash green to indicate the ice maker is ON, then transition to the falling white display.
5. Opal will begin to produce ice in 15-30 minutes. It will continue to make ice until the bin is full, or it runs out of water. To continue making ice, just add more water.

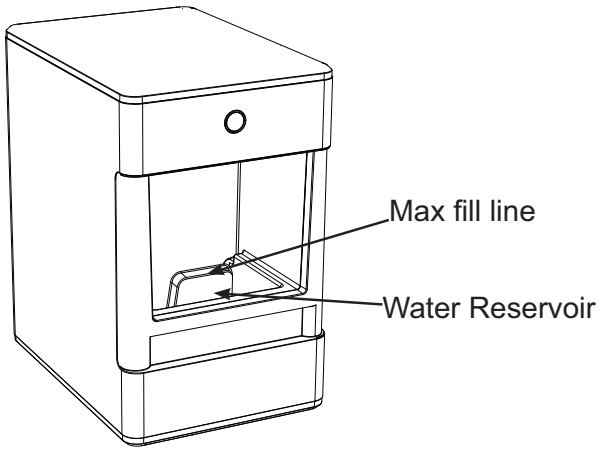

Draining Opal

We recommend draining your Opal when:

1. You put it away or anytime it's being relocated
2. You turn it off for more than a few days. (i.e. vacation)
3. You are not using much ice. Continous recirculation of meltwater may affect taste. For best results, drain your Opal.

Water Filter

The Opal Water Filter, is available at GEAppliances and is the only water filter compatible with Opal. Please follow the installation instructions included with your filter.

NOTE: Remove your water filter (if installed) and reinstall the screened intake cap prior to cleaning your Opal.

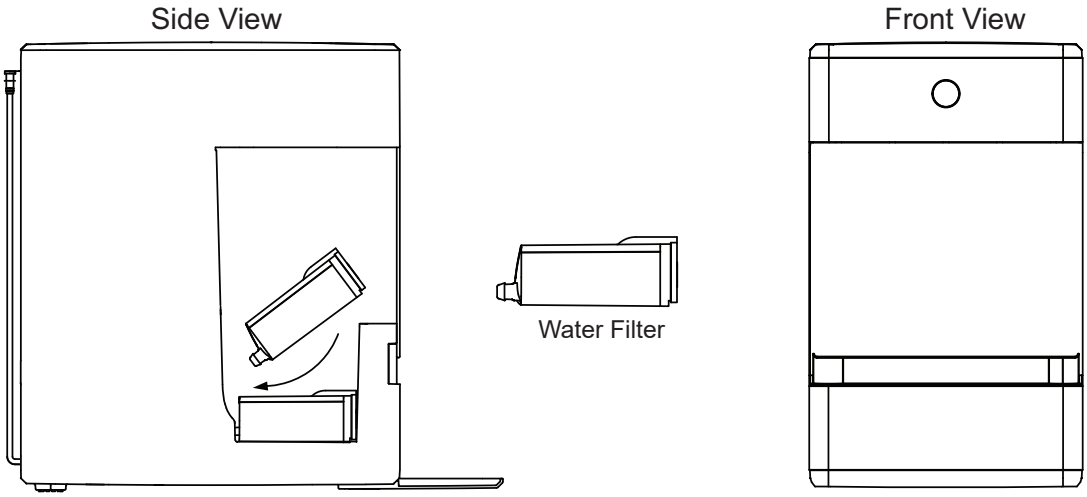

Water filter snaps into place

Side Tank Accessory

Side Tank Quick Start

NOTE: There are two drain tubes located on the back of your Opal Nugget Ice Maker indicated as drain tube A and B in the illustration on page 12.

1. Hand Wash Only: Rinse and hand wash Opal Side Tank with warm water and a mild dish soap. Remove Opal Side Tank's cap and wash the cap and rubber valve with water and a mild dish soap. The Side Tank base can be washed by disconnecting the hose and adding a small amount of soapy water to it. Scrub as needed and rinse thoroughly. The rinse water should drain out the port in the back.

   Rinse the cap, rubber valve, tank and the base well to remove any residual soap (see illustration).

   DO NOT WASH THE SIDE TANK IN THE DISHWASHER.

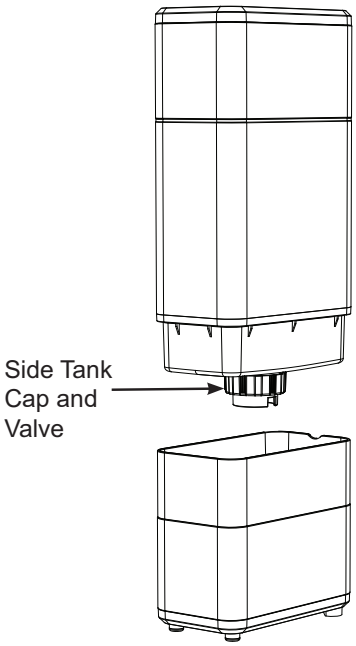

2. Unplug Opal Nugget Ice Maker. Unhook Opal's drain tubes and drain the water from the reservoir.

3. Connect drain tube, labeled B, to the back of Opal Side Tank's base.

4. Make sure drain tube (A) is connected to the black hanger and installed on the back of Opal.

5. Make sure drain tube (B) connecting to the Side Tank is resting flat on the countertop.

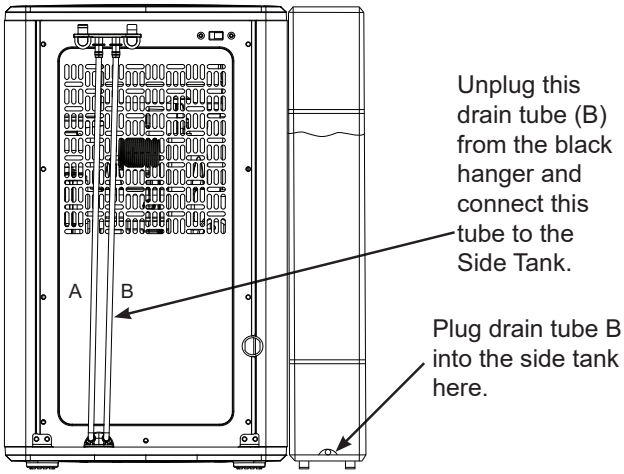

Side Tank Accessory

6. Place Opal Side Tank against the Opal Nugget Ice Maker so that the Side Tank magnets attach to the ice maker. Your Opal Side Tank can be installed on either side of your Opal Nugget Ice Maker.

   NOTE: Care should be taken to connect the correct drain tube to the Opal Side Tank. Drain tube (B) should always be connected to the Side Tank whether it is installed on the left or right side of the Opal Nugget Ice Maker.

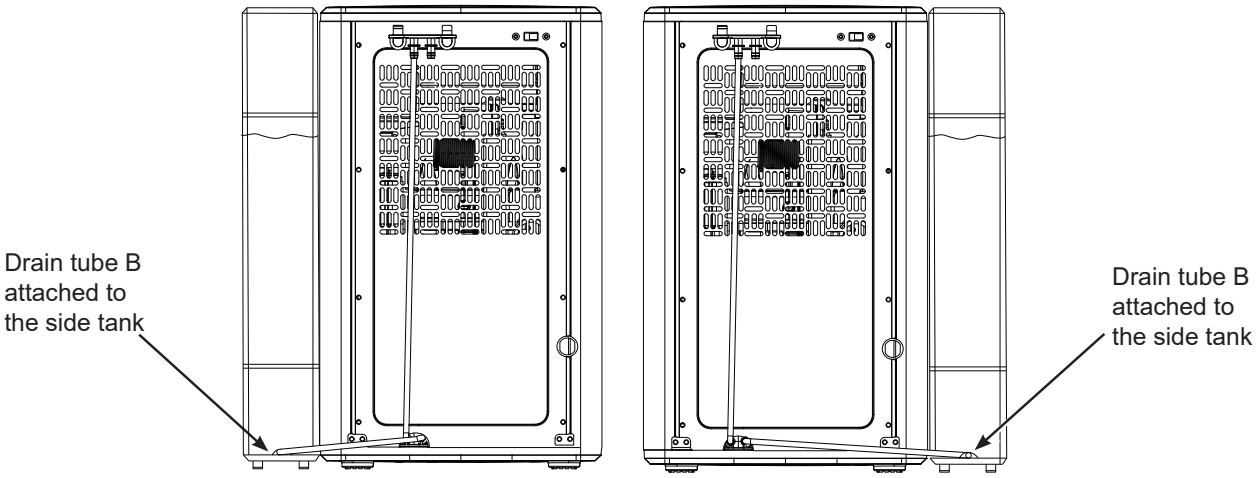

7. Remove Opal Side Tank's clear reservoir from its base.
8. Unscrew Opal Side Tank's cap from the reservoir. Fill the clear reservoir with water.
9. Replace Opal Side Tank's cap. Ensure the cap is clean when installing.
10. Carefully flip over Opal Side Tank's reservoir and place in the base. Water should start flowing into the Opal Nugget Ice Maker and bubbles in the Opal Side Tank will appear periodically during the time water is flowing to the ice maker.

NOTE: If water does not appear to flow into the ice maker, please check for the following:

- There may be bubbles in drain tube (B) connecting the Side Tank to the Opal.
- Tube (B) is not lying flat.

If either of the above issues are present, adjust tube (B) to allow the water to flow.

11. Fill Opal Nugget Ice Maker's reservoir.
12. Plug in Opal Nugget Ice Maker, and begin making ice.

Side Tank Accessory

⚠WARNING To reduce the risk of electrical shock or injury when using your Opal, follow these basic safety precautions:

- Unplug the product before cleaning by hand and when not in use.
- Do not use with water that is microbiologically unsafe or of unknown quality.
- Use caution when filling and installing Opal Side Tank, as filled unit may be heavy.
- Do not use this side tank for any liquid other than water.
- Children should not fill or install Opal Side Tank, as filled unit may be heavy.
- Make sure that Opal Nugget Ice Maker is unplugged when draining reservoir and installing Opal Side Tank.
- Ensure that Opal Side Tank is installed on a level surface that will be stable even when Opal Side Tank is full.
- Make sure the cap of the Side Tank remains clean during filling and operation. Hands should be washed and clean prior to opening and closing the cap.

Use and Care

Cleaning the Side Tank

- Remove and drain the Side Tank.
- If there is residual water in Opal Side Tank base unit, flip Opal Side Tank's base to drain.
- Remove and wash Opal Side Tank's cap and valve with dish soap and warm water as needed. Ensure the cap is clean after removing and re-installing by hand.
- Only remove drain tubes while near a sink or bucket, as removing drain tubes from Opal or Opal Side Tank will drain any water in either unit.

Proper Installation and Location

The side tank should be installed flush to the front of the Opal Nugget Ice maker so that it does not block the airflow vents on the Opal Nugget Ice maker. Opal Side Tank needs to sit on the same level surface as your Opal Nugget Ice Maker. Do not elevate Opal Side Tank, or your Opal may overflow.

To Remove Mineral Deposits:

Mix two quarts of water with two quarts of vinegar, OR use the Opal Cleaning Kit.

Clean any visible mineral buildup or deposits with this solution. If deposits are present in the tank, fill the tank with this solution and let soak. Be sure to drain and rinse the tank thoroughly after cleaning. Stubborn deposits may require more than one treatment.

Side Tank Troubleshooting

If water does not flow from the Side Tank to the Opal Ice Maker:

There may be bubbles in the tube connecting the side tank to the opal or it is not lying flat. Try adjusting the tube to allow the water to flow. Once water starts flowing it typically will not need further adjusting.

Normal Operating Sounds

Your new ice maker may make sounds that are not familiar. Most of these sounds are normal. Hard surfaces like the floor, walls, and countertops can amplify these sounds. The following describes the sounds that may be new to you and what may be creating them.

- WHIR - When Opal is first turned on, you may notice the condenser fan spinning.
- BUZZ - When the water pump first turns on, it may be dry and slightly noisy. Once it is filled with water, the noise reduces significantly.
- RATTLE - Rattling noises may be produced from the flow of the refrigerant. These noises should reduce significantly once the refrigerant system has stabilized.
- GURGLE - When the refrigerant system shuts off, there may be a brief gurgle as the refrigerant stops flowing.
- HUM - The compressor is a motor. It produces a low toned humming sound while it is running.
- CLICK - As nugget ice is produced, it drops into the ice drawer. The first nuggets produced are the loudest, as they impact the bottom of the ice bin. As the bin fills, this noise reduces significantly.
- SQUEAK – When Opal is in need of defrosting, it may start to squeak as ice starts to build up around the mechanisms. The defost cycle is automatic, and may take 30-45 minutes. During this time, the front button won’t respond.

Radio Frequency Interference

This product has been tested and found to comply with the limits set forth in Title 47 CFR Part 15 - Radio Frequency Devices. Operation is subject to the following conditions: (1) This device may not cause harmful interference, and (2) this device must accept any interference received, including interference that may cause undesired operation. This product generates, uses, and can radiate radio frequency energy, and if not used in accordance with the instructions, may cause harmful interference to radio communications. If this product does cause harmful interference to radio or television reception, which can be determined by unplugging Opal, the user is encouraged to try to correct the interference by one or more of the following measures:

- Reorient or relocate the TV or radio antennas.
- Increase the distance between the product and TV or radio.
- Plug Opal into a separate outlet from a radio or TV.

The transmitter must not be co-located or operating in conjunction with other antennas or transmitters.

Ice Maker Product Specifications

Description of product	Portable nugget ice maker
Model	OPAL01GEPKT
Voltage/Frequency	120V AC/60Hz
Current	2.5A
Color	Stainless/Black
Ice storage capacity	3.0 lbs
Ice making rate	24 lbs per day / 1 lb per hour*
Dimensions (width x depth x height)	10.5 in x 14 in x 17 in
Installation clearance (sides and back)	3 in
Operating environment	55°F - 90°F
Weight (when empty)	44 lbs

NOTE: Technical data and performance information provided for reference only.

Specifications are subject to change. Check the rating label on your ice maker for the most accurate information.

*The actual quantity of ice produced will vary with environmental conditions.

Note: Products containing refrigerants

This product contains a refrigerant, which under Federal Law must be removed prior to product disposal. If you are disposing this, or any refrigeration product, check with your local waste company for guidance.

⚠WARNING **In order to avoid exposure to UV radiation, disconnect power to the ice maker before removing the external covers.**

Do not Attempt to repair or replace the UV lamp

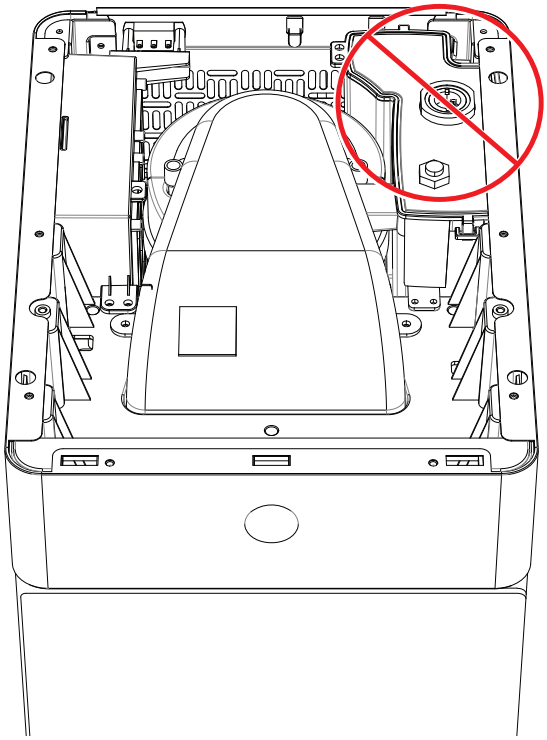

LIMITED WARRANTY

GE Appliances Ice Maker Limited Warranty

GEAppliances.com
Please have your serial number and your model number available when calling for service. Call 1.866.907.6718 for service questions.

For the Period of:	GE Appliances Covers
One Year From the date of the original purchase	If the ice machine fails due to a defect in materials or workmanship, during the **limited one-year warranty**, GE Appliances will either replace your product with a new or remanufactured product, or refund the purchase price of the product at GE Appliances sole discretion.

What GE Appliances Will Not Cover:

- Service trips to your home.
- Improper installation, delivery or maintenance.
- Failure of the product if it is abused, misused, or used for other than the intended purpose or used commercially.
- Replacement of house fuses or resetting of circuit breakers.
- Damage caused after delivery.
- Replacement of the light bulbs, if included.
- Damage to the product caused by accident, fire, floods or acts of God.
- Incidental or consequential damage caused by possible defects with this appliance.
- Software bugs that can be corrected with an update via the Opal App
- Labor and other charges to install and/or remove the product

EXCLUSION OF IMPLIED WARRANTIES
Your sole and exclusive remedies are product exchange or refund as provided in this Limited Warranty. Any implied warranties, including the implied warranties of merchantability or fitness for a particular purpose, are limited to one year or the shortest period allowed by law.

For sale in the 50 United States and the District of Columbia only: For US Customers: This limited warranty is extended to the original purchaser for products purchased for home use within the USA. In Alaska and Hawaii, the limited warranty does not include the costs of shipping units.
Some states do not allow the exclusion or limitation of incidental or consequential damages. This warranty gives you specific legal rights, and you may also have other rights which vary from state to state. To know what your legal rights are, consult your local or state consumer affairs office or your state's Attorney General.

Warrantor: GE Appliances, *a* **Haier** *company*
Louisville, KY 40225

Staple your receipt here. Proof of the original purchase date is needed to obtain service under the warranty.

49-1000418 Rev. 0

Consumer Support

Service and Registration

Register your new appliance on-line at your convenience! Timely product registration will allow for enhanced communication and prompt service under the terms of your warranty, should the need arise.

Register your appliance at **GEAppliances.com/register** or visit **myopalservice.com** to submit a service request.

Contact Us

If you are not satisfied with the service you receive from GE Appliances, contact us on our Website with all the details including your phone number, or write to:

In the US: General Manager, Customer Relations | GE Appliances, Appliance Park | Louisville, KY 40225
GEAppliances.com/contact

In Canada: Director, Consumer Relations, Mabe Canada Inc. | Suite 310, 1 Factory Lane | Moncton, N.B. E1C 9M3
GEAppliances.ca/en/contact-us